RUPES®

i-BRID NANO LONG NECK
i-BRID NANO SHORT NECK

HR81ML
HR81M

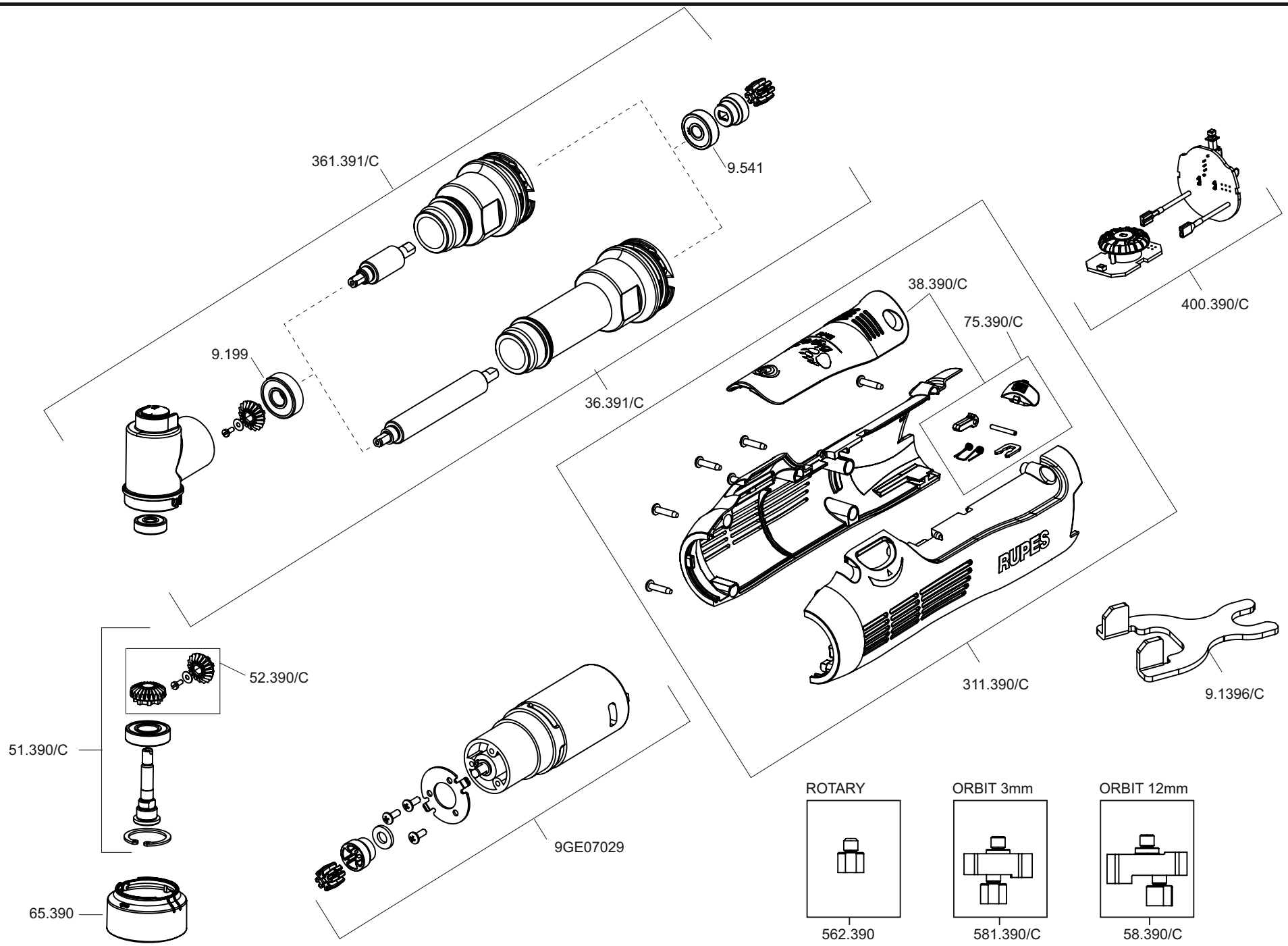

04/2022