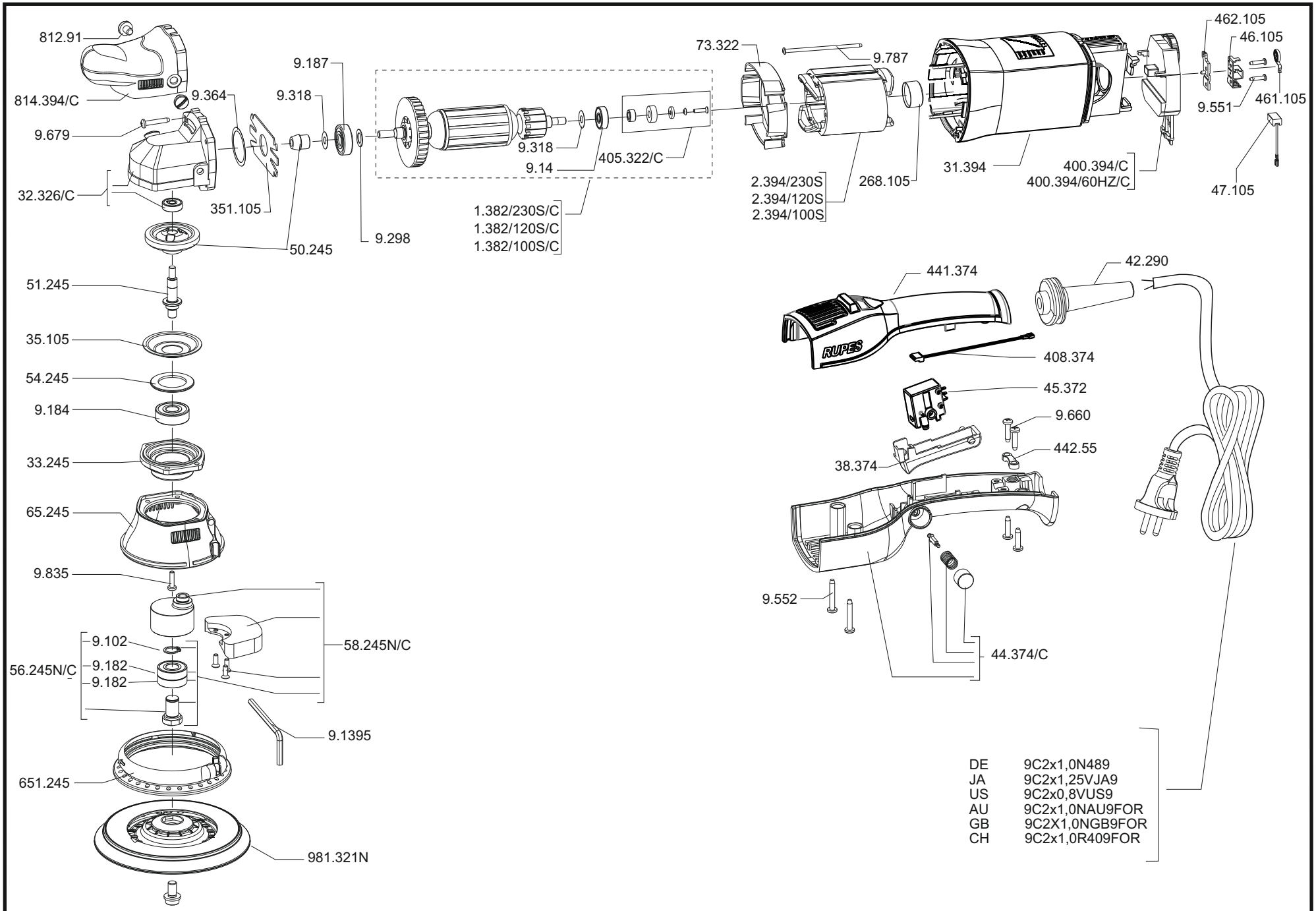

RUPES

LUCIDATRICE ROTORBITALI
RANDOM-ORBITAL POLISHER

LHR21III