INFRARR
ADVANCED INFRARED TECHNOLOGY

STAR

01/01/2013 PARTI DI RICAMBIO – SPARE PARTS

CP 80



POTENZA / *POWER* 8 KW

Essiccatore mobile con tecnologia IR ad onda medio-rapida

Mobile dryer with IR fast-medium wave technology

www.infrarr.com Tel. +39 02 95 36 00 93 Fax +39 02 95 36 00 97 info@infrarr.com

CENTRALINA - *CONTROL BOARD*

CODE	DESCRIZIONE / *DESCRIPTION*
1R-QP**1**.0	Pannello/Alu-panel
1R-QP**2**.0	Scheda elettr./ Electronic card/FM460
1R-QP**3**.1	Fusibile / Fuse 10x38 mm 16A (CP 80.0 400V 3PE)
1R-QP**3**.3	Fusibile / Fuse 10X38 mm 25A (CP 80.1 230V 3PE)
1R-QP**4**.0	Interruttore generale / General Red switch 20A (CP 80.0 400V 3PE)
1R-QP**4**.1	Interruttore generale / General Red switch 25A (CP 80.1 230V 3PE)
1R-QP**5**.0	Portafusibili / Fuse block M3
1R-QP**6**.0	Adesivo per pannello / Adhesive label
1R-QP**7**.0	Interruttore Nero / Black switch 20A

1R-QP0.5	Quadro comando completo 2C / Complete control board 2C

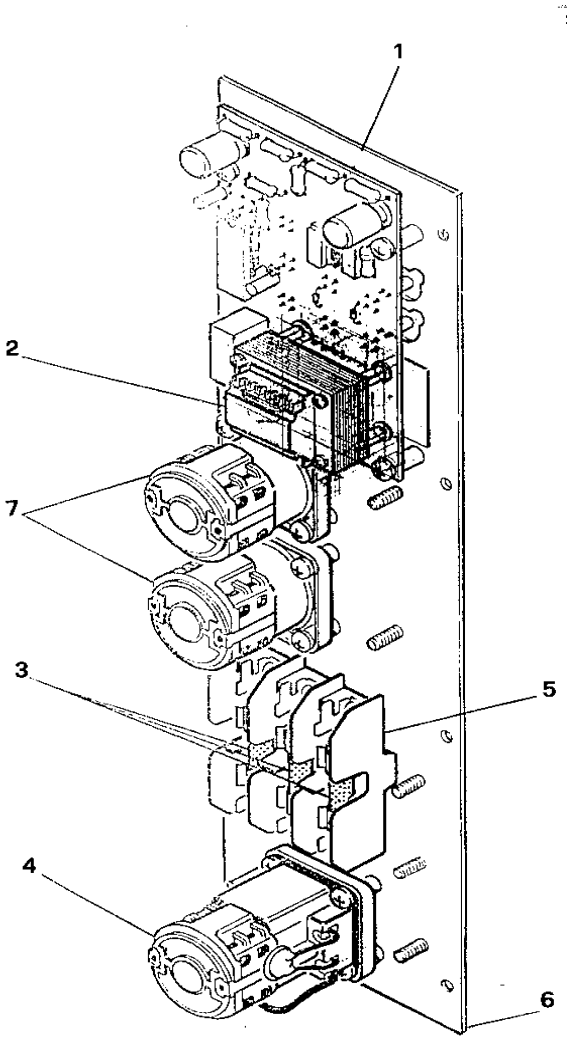

www.infrarr.com Tel. +39 02 95 36 00 93 Fax +39 02 95 36 00 97 info@infrarr.com

INFRARR
ADVANCED INFRARED TECHNOLOGY

CP 80

CASSETTA – *CASSETTE*

CODE	DESCRIZIONE / *DESCRIPTION*
2R-P**01**	Vite / Screw TC croce 4,2x9,5 nich.
2R-P**02**	Dado / Screw nut M4 inox
2R-P**03**	Vite / Screw TC croce M4x8 inox
2R-P**04**	Rondella / Washer Ø 4 inox .
2R-P**05**	Supporto lampada / Lamp support
2R-P**06**	Vite / Screw TC croce M4x8 inox
2R-P**07**	Ceramica/ Ceramic bush Ø10
2R-P**08**	Tubo di vertro-quarzo / Glass-quartz tube 258 mm
2R-P**09**.1	Resistenza elettrica / Resistance 666W 115V
2R-P**10**	Ceramica Completa / Complete ceramic
2R-P**11**	Dado quadro / Screw nut M5 inox
2R-P**12**	Rondella grower / Washer Ø 5
2R-P**13**	Vite / Screw TC croce M5 x16
2R-P**14**	Riflettore a parabola / Reflector 262 mm
2R-P**15**	Rete di protezione / Net protection 262 mm
2R-P**16**	Cavo elettr.speciale cad / Special electr.cable 2,5mmq/pc.
2R-P**17**	Rondella / Washer Ø 4 inox .
2R-P**18**	Vite / Screw TC croce M4x8 inox
2R-P**19**	Dado / Screw nut M4 zinc
2R-P**20**	Vite / Screw TC croce M4x16 zinc.
2R-P**21**	Custodia ad incasso / Plug embedding CHI06L
2R-P**22**	Frutto spina / Plug connector CNM06
2R-P**23**	Vite / Screw TC croce M 4,8x9,5
2R-P**24**	Scatola ventilatore / Fan aluminium-box
2R-P**24.X**	Scatola ventilatore / Fan aluminium-box
2R-P**25**	Ventilatore / Rotary fan 92x92mm
2R-P**25.X**	Ventilatore / Rotary fan 120x120mm
2R-P**26**	Profilo inferiore / Lower body
2R-P**27**	Fianchetto / Side plate
2R-P**27.X**	Fianchetto / Side plate
2R-P**28**	Dado flangiato / Screw Nut M 8 zinc.
2R-P**29**	Vite / Screw TCE M8x30 zinc.
2R-P**30**	Maniglia / Handle 200mm
2R-P**31**	Profilo superiore / Upper body
2R-P**34**	Schermo 0ro-bianco Allu / Alu white gold screen 3 C.
2R-P**35**	Protezione schermo / Screen cover inox
2R-P**40**	Lamina riflettente / Special leaf L=262 mm

2R-P666	Resistenza+vetro completa / Resistence+glass complete 666W 258mm
2R-P101	Cassetta completa / Complete cassette 4 Kw

www.infrarr.com Tel. +39 02 95 36 00 93 Fax +39 02 95 36 00 97 info@infrarr.com

INFRARR
ADVANCED INFRARED TECHNOLOGY

CP 80

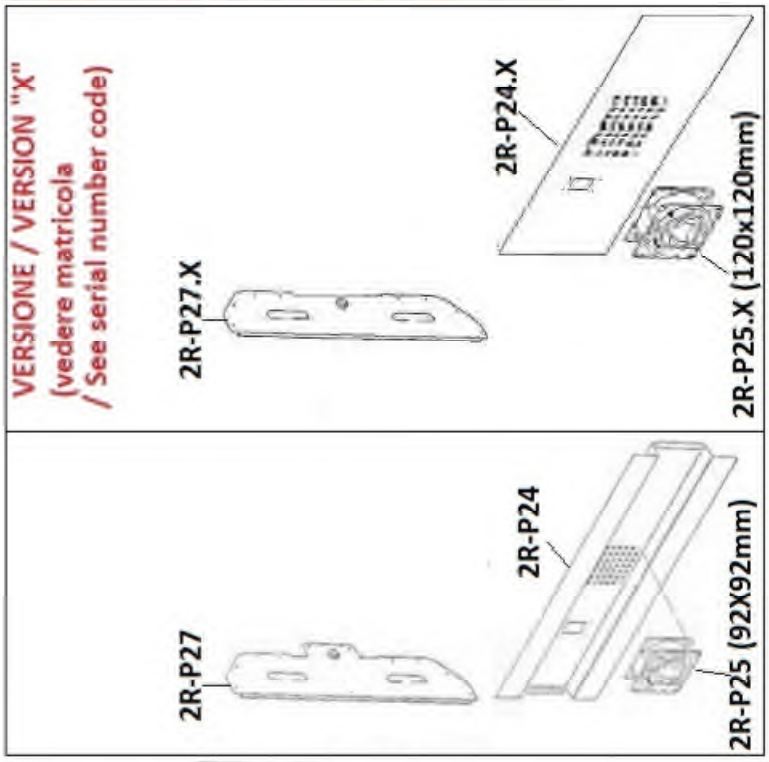

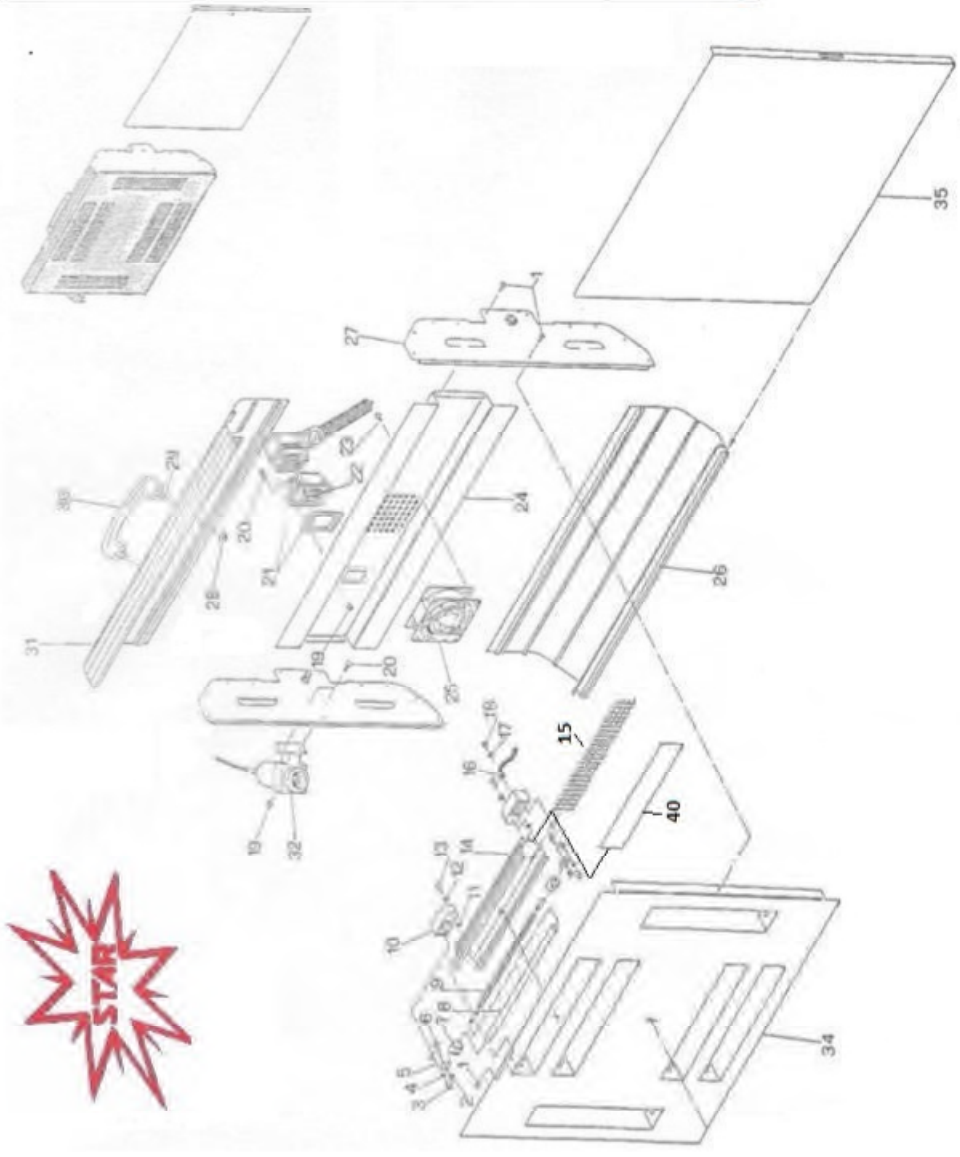

www.infrarr.com Tel. +39 02 95 36 00 93 Fax +39 02 95 36 00 97 info@infrarr.com

STRUTTURA – *STRUCTURE*

CODICE / *CODE*	**DESCRIZIONE** / *DESCRIPTION*
3R-**02**	Ruota con freno / Wheel + brake PRB 100mm
3R-**03**	Ruota / Wheel PRB 100mm
3R-**04**	Vite / Screw M10X35mm TE
3R-**05**	Rondella / Washer M10x21mm
3R-**06**	Dado flangiato / Nut M10
3R-**08**	Vite perf. / Screw M4,8X25mm T.P.S.
3R-**10**	Vite / Screw M10X20mm TE
3R-**11**	Vite / Screw M8X20mm TE FLANG.
3R-**12**	Blocchetto / Special nut M10 24x24x15mm
3R-**15**	Rivetto / Rivet M4,8X14mm
3R-**19**.0	Struttura / Aluminium structure 1,0m.
3R-**19**.2	Struttura / Aluminium structure 0,52m
3R-**20**	Tappo / Rail cap ABS
3R-**21**	Vite / Screw M4,8x25mm T.P.S.
3R-**22**	Maniglia / Handle M 8 X 25
3R-**27**	Dado plastica / Plastic nut PG 16
3R-**27**.1	Dado plastica / Plastic nut PG 13,5
3R-**28**	Pressacavo / Gland PG 13,5
3R-**28**.1	Pressacavo / Gland PG 16
3R-**29**.1	Cavo elet. / Electric cable 4X2,5mmq x meter (230/400V 3PE)
3R-**30**.1	Spina elet. / Electr. plug 3PE 400V
3R-**30**.2	Spina elet. / Electr. plug 3PE+N 400V
3R-**31**	Vite / Screw M3,5x9,5mm TORK inox.
3R-**32**	Raccordo / Pipe-fitting PG 13,5
3R-**33**.1	Guaina + cavi / Flexible tube+cables 3PE L= 3,3m
3R-**34**	Custodia presa / Hood for socket CHOL13
3R-**35**	Frutto presa elet. / Socket connector CNF06
3R-**36**	Vite / Screw M10X55mm TE
3R-**38**	Dado / Nut M10 Autoblock
3R-**39**	Tappo / Nylon nut M20x30 H=16mm
3R-**42**	Vite / Screw M4x10mm TBL
3R-**43**.4	Ammortizzatore / Shock absorber 1200N
3R-**44**	Perno / Special hinge M8x32mm
3R-**45**	Coppiglia / Clasp M1,8
3R-**46**	Supporto x testa / Rotating head support
3R-**46.1**	Supporto x testa / Rotatine head support
3R-**47**	Dado / Nut M14 Autoblock
3R-**48**	Rondella / Washer M14x28mm
3R-**49**	Testa + perno / Rotating head + screw
3R-**49.1**	Testa / Rotating head
3R-**49.2**	Testa / Rotating head
3R-**50**	Spina elast. / Flexible hinge M5x40mm
3R-**51**	Rondella nylon / Nylon washer M10x80mm
3R-**52**	Pistone a molla / Spring piston GN617-6-AK
3R-**53**	Vite / Screw M10x80mmTE
3R-**54**	Vite / Screw M10x90mm TE
3R-**55**	Tappo gomma / Rubber cup M14
3R-**57**	Rondella nylon / Nylon washer M10x21mm
3R-**58**	Telaio / Complete NR.2 Cassettes support
3R-**59**	Vite / Screw M5,5x19mm nich.
3R-**60**	Fissa-guaina / Flexible tube support TBXFH17-0
3R-**61**	Raccordo / Pipe-fitting “T”
3R-**62/3**	Coppia bracci / Brackets couple
3R-**68**	Vite / Screw M10x25mm TE

www.infrarr.com Tel. +39 02 95 36 00 93 Fax +39 02 95 36 00 97 info@infrarr.com

3R-**70**	Dado Autobloccante / Nut autoblock M6 zinc.
3R-**71.1**	Vite / Screw M14x120mm
3R-**300**	Basamento / Base
3R-**309**	Piede / Foot
3R-**322**	Vite flangiata M8x20mm
3R-**337**	Maniglione con supporto bracci / Big handle and brackets support
3R-**337.1**	Supporto bracci / Brackets support
3R-**337.1MAN**	Maniglione / Big handle
3R-**337.2**	Supporto bracci / Brackets support
3R-**341**	Fodera per bracci / Brackets cover
3R-**356**	Rondella nylon / Nylon washer M10x60mm
3R-**540**	Rondella / Washer M6
3R-**700**	Maniglione / Big Handle

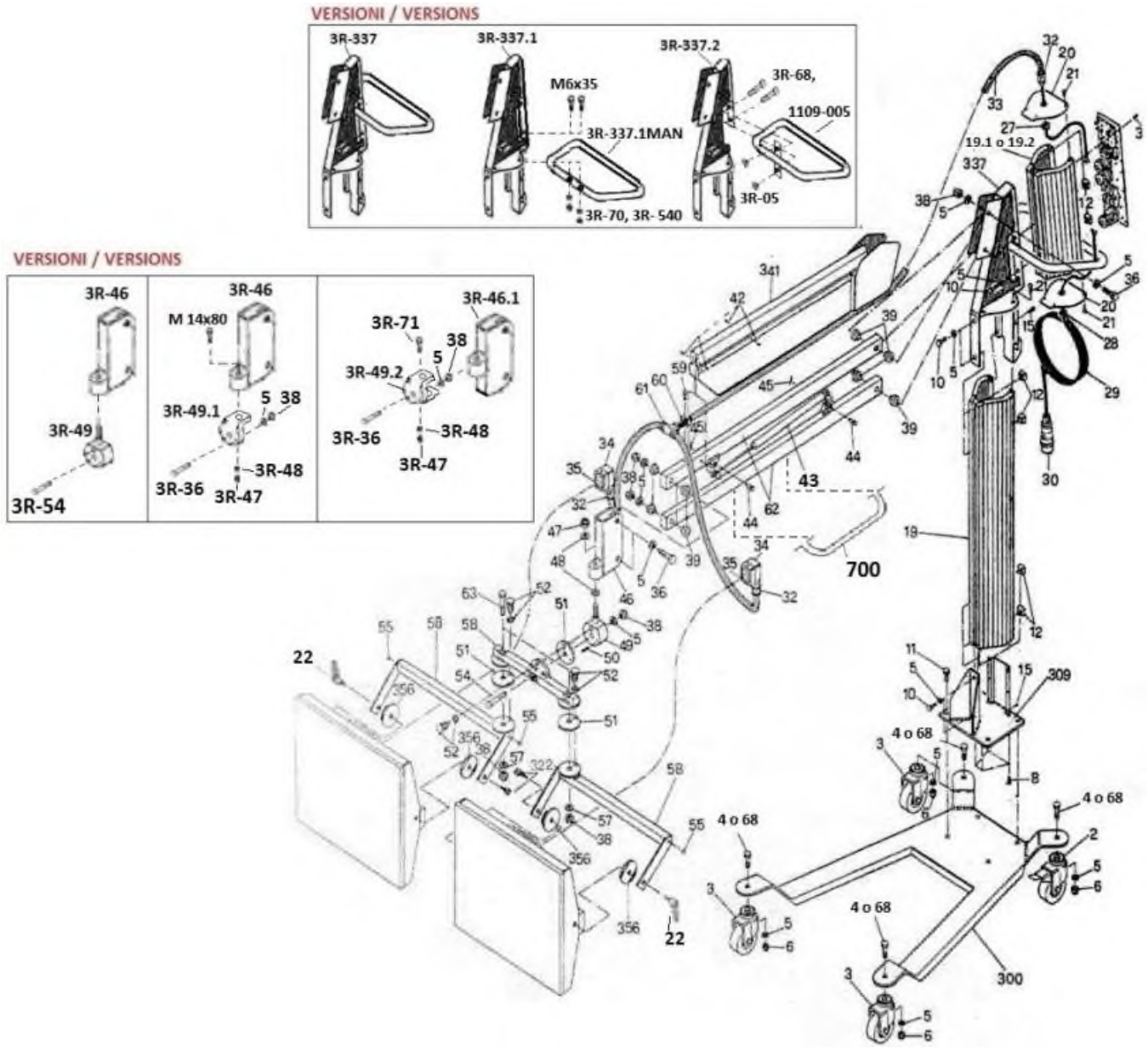

www.infrarr.com Tel. +39 02 95 36 00 93 Fax +39 02 95 36 00 97 info@infrarr.com