INFRARR
ADVANCED INFRARED TECHNOLOGY

STAR

01/01/2013 PARTI DI RICAMBIO – SPARE PARTS

CP 38



POTENZA / *POWER* **4 KW**

Essiccatore mobile con tecnologia IR ad onda medio-rapida

Mobile dryer with IR fast-medium wave technology

www.infrarr.com Tel. +39 02 95 36 00 93 Fax +39 02 95 36 00 97 info@infrarr.com

CENTRALINA - *CONTROL BOARD*

CODE	DESCRIZIONE / *DESCRIPTION*
1R-QP**1**.0	Pannello / Alu-panel
1R-QP**2**.0	Scheda elettr. / Electronic card/FM460
1R-QP**3**.0	Fusibile / Fuse 10x38 mm 10A (CP38.0 400V 3PE)
1R-QP**3**.1	Fusibile / Fuse 10x38 mm 16A (CP38.1 230V 3PE)
1R-QP**4**.0	Interruttore generale / General Red switch **20A**
1R-QP**5**.0	Portafusibili / Fuse block M3
1R-QP**6**.0	Adesivo per pannello / Adhesive label

1R-QP0.4	Quadro comando completo 1C / Complete control board 1C

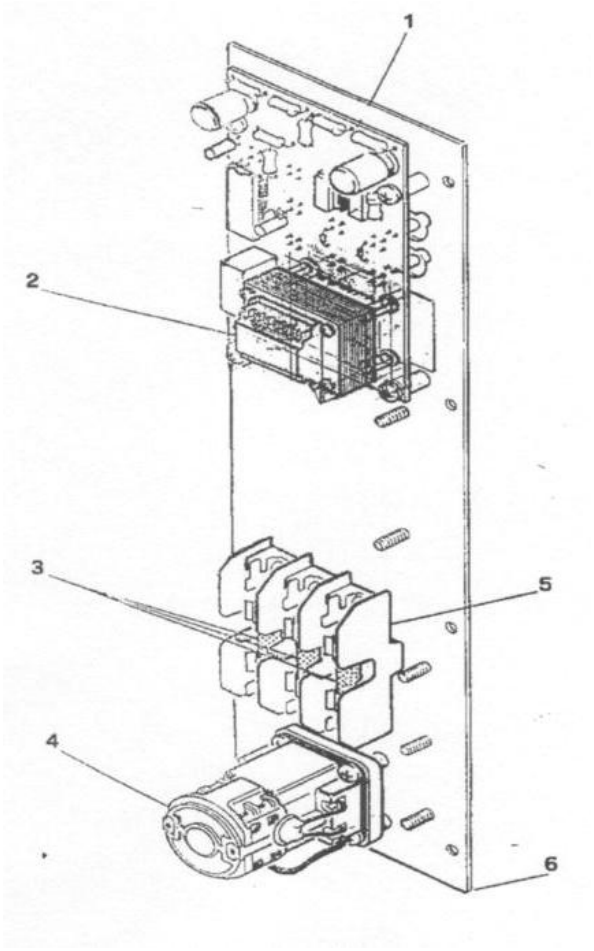

www.infrarr.com Tel. +39 02 95 36 00 93 Fax +39 02 95 36 00 97 info@infrarr.com

CASSETTA – *CASSETTE*

CODE	DESCRIZIONE / *DESCRIPTION*
2R-P**01**	Vite / Screw TC croce 4,2x9,5 nich.
2R-P**02**	Dado / Screw nut M4 inox
2R-P**03**	Vite / Screw TC croce M4x8 inox
2R-P**04**	Rondella / Washer Ø 4 inox .
2R-P**05**	Supporto lampada / Lamp support
2R-P**06**	Vite / Screw TC croce M4x8 inox
2R-P**07**	Ceramica/ Ceramic bush Ø10
2R-P**08**	Tubo di vertro-quarzo / Glass-quartz tube 258 mm
2R-P**09**.1	Resistenza elettrica / Resistance 666W 115V
2R-P**10**	Ceramica Completa / Complete ceramic
2R-P**11**	Dado quadro / Screw nut M5 inox
2R-P**12**	Rondella grower / Washer Ø 5
2R-P**13**	Vite / Screw TC croce M5 x16
2R-P**14**	Riflettore a parabola / Reflector 262 mm
2R-P**15**	Rete di protezione / Net protection 262 mm
2R-P**16**	Cavo elettr.speciale cad / Special electr.cable 2,5mmq/pc.
2R-P**17**	Rondella / Washer Ø 4 inox .
2R-P**18**	Vite / Screw TC croce M4x8 inox
2R-P**19**	Dado / Screw nut M4 zinc
2R-P**20**	Vite / Screw TC croce M4x16 zinc.
2R-P**21**	Custodia ad incasso / Plug embedding CHI06L
2R-P**22**	Frutto spina / Plug connector CNM06
2R-P**23**	Vite / Screw TC croce M 4,8x9,5
2R-P**24**	Scatola ventilatore / Fan aluminium-box
2R-P**24.X**	Scatola ventilatore / Fan aluminium-box
2R-P**25**	Ventilatore / Rotary fan 92x92mm
2R-P**25.X**	Ventilatore / Rotary fan 120x120mm
2R-P**26**	Profilo inferiore / Lower body
2R-P**27**	Fianchetto / Side plate
2R-P**27.X**	Fianchetto / Side plate
2R-P**28**	Dado flangiato / Screw Nut M 8 zinc.
2R-P**29**	Vite / Screw TCE M8x30 zinc.
2R-P**30**	Maniglia / Handle 200mm
2R-P**31**	Profilo superiore / Upper body
2R-P**34**	Schermo 0ro-bianco Allu / Alu white gold screen 3 C.
2R-P**35**	Protezione schermo / Screen cover inox
2R-P**40**	Lamina riflettente / Special leaf L=262 mm

2R-P666	Resistenza+vetro completa / Resistence+glass complete 666W 258mm
2R-P101	Cassetta completa / Complete cassette 4 Kw

www.infrarr.com Tel. +39 02 95 36 00 93 Fax +39 02 95 36 00 97 info@infrarr.com

INFRARR
ADVANCED INFRARED TECHNOLOGY

CP 38

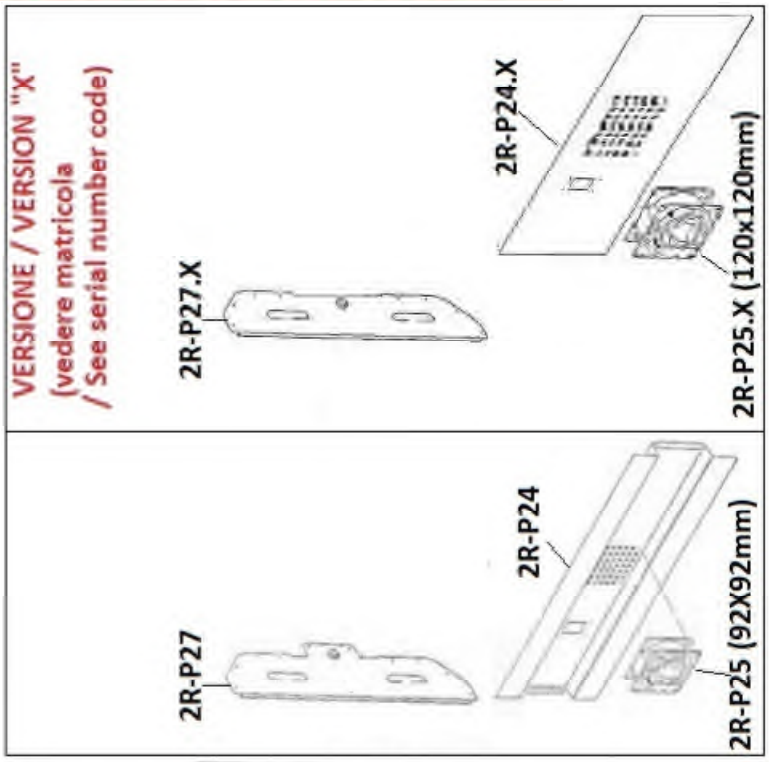

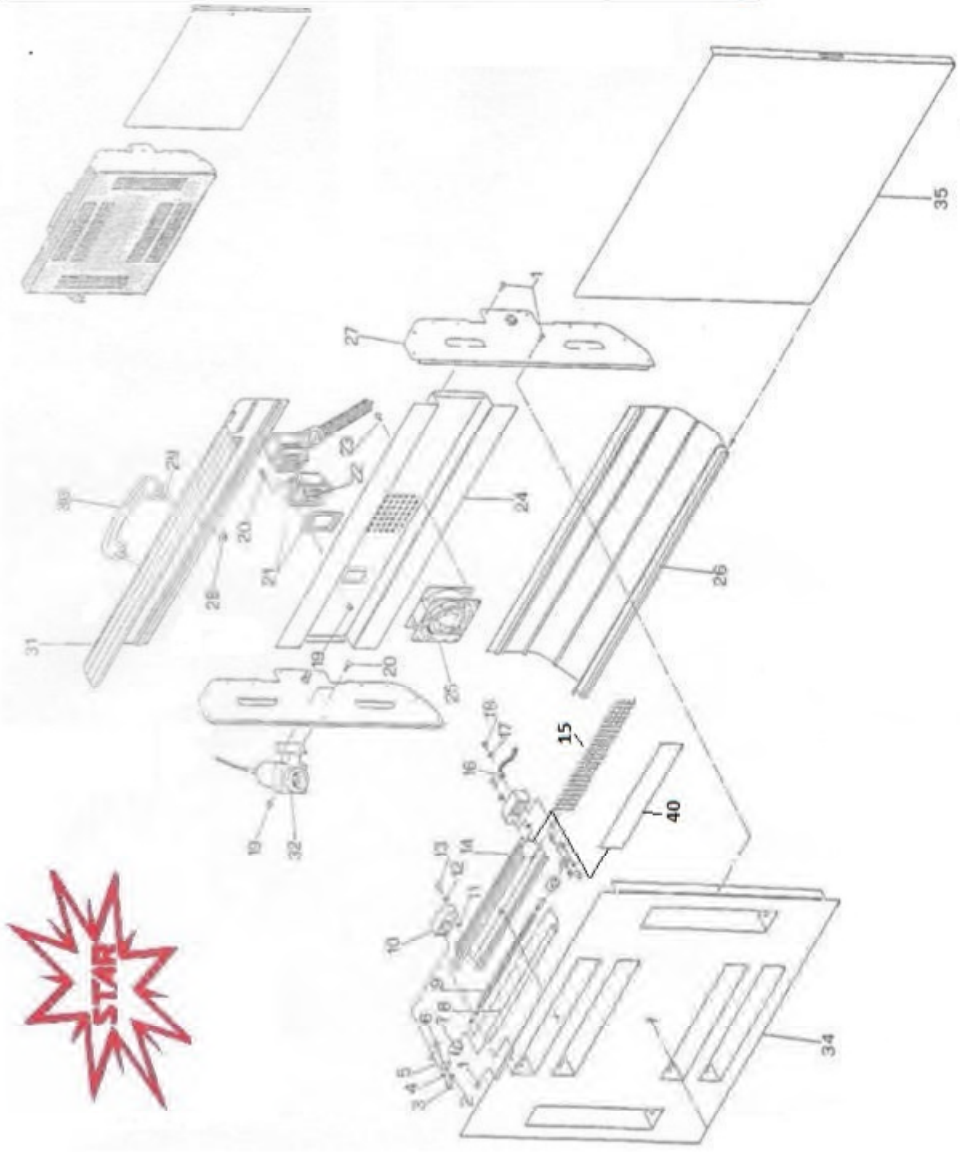

www.infrarr.com Tel. +39 02 95 36 00 93 Fax +39 02 95 36 00 97 info@infrarr.com

STRUTTURA – *STRUCTURE*

CODICE / *CODE*	**DESCRIZIONE** / *DESCRIPTION*
3R-**01**	Basamento / Base
3R-**02**	Ruota con freno / Wheel + brake PRB 100mm
3R-**03**	Ruota / Wheel PRB 100mm
3R-**05**	Rondella / Washer M10x21mm
3R-**06**	Dado flangiato / Nut M10
3R-**07**	Vite / Screw M6X30mm T.P.S.
3R-**08**	Vite perf.. / Screw M4,8X25mm T.P.S.
3R-**09**	Piede / Foot
3R-**10**	Vite / Screw M10X20mm TE
3R-**11**	Vite / Screw M8X20mm TE FLANG.
3R-**12**	Blocchetto / Specisl nut M10 24x24x15mm
3R-**13**	Fodera posteriore / Back cover
3R-**14**	Reggi cavo / Cable support
3R-**15**	Rivetto / River M4,8X14mm
3R-**16**	Rivetto / River M3,2X9mm
3R-**17**	Maniglione + telaio / Big handle + bracket
3R-**18**	Guarnizione nylon / Nylon wascher 200x40 mm
3R-**19**	Struttura / Aluminium structure 1,5m.
3R-**20**	Tappo / Rail cap ABS
3R-**21**	Vite / Screw M4,8x25mm T.P.S.
3R-**22**	Maniglia / Handle M 8 X 25
3R-**24**	Rondella / Washer M16x30mm
3R-**25**	Perno filett. / Special screw M10x35mm
3R-**26**	Maniglia / Handle M10
3R-**27**	Dado plastica / Plastic nut PG 16
3R-**27.1**	Dado plastica / Plastic nut PG 13,5
3R-**28**	Pressacavo / Gland PG 13,5
3R-**28.1**	Pressacavo / Gland PG 16
3R-**29.1**	Cavo elet. / Electric cable 4X2,5mmq x meter 230/400V 3PE
3R-**30.1**	Spina elet. / Electric plug 3PE 400V
3R-**30.2**	Spina elet. / Electric plug 3PE+N 400V
3R-**31**	Vite / Screw M3,5x9,5mm TORK inox.
3R-**32**	Raccordo / Pipe-Fitting PG 13,5
3R-**33**	Guaina + cavi / Flexible tube + cables L+N L=2,80m
3R-**34**	Custodia presa / Hood for socket CHOL13
3R-**35**	Frutto presa elet. / Socket connector CNF06
3R-**68**	Vite / Screw M10x25mm TE
3R-**322**	Vite / Screw M8X20mm TE FLANG.
3R-**323**	Rondella / Washer nylon M10

www.infrarr.com Tel. +39 02 95 36 00 93 Fax +39 02 95 36 00 97 info@infrarr.com

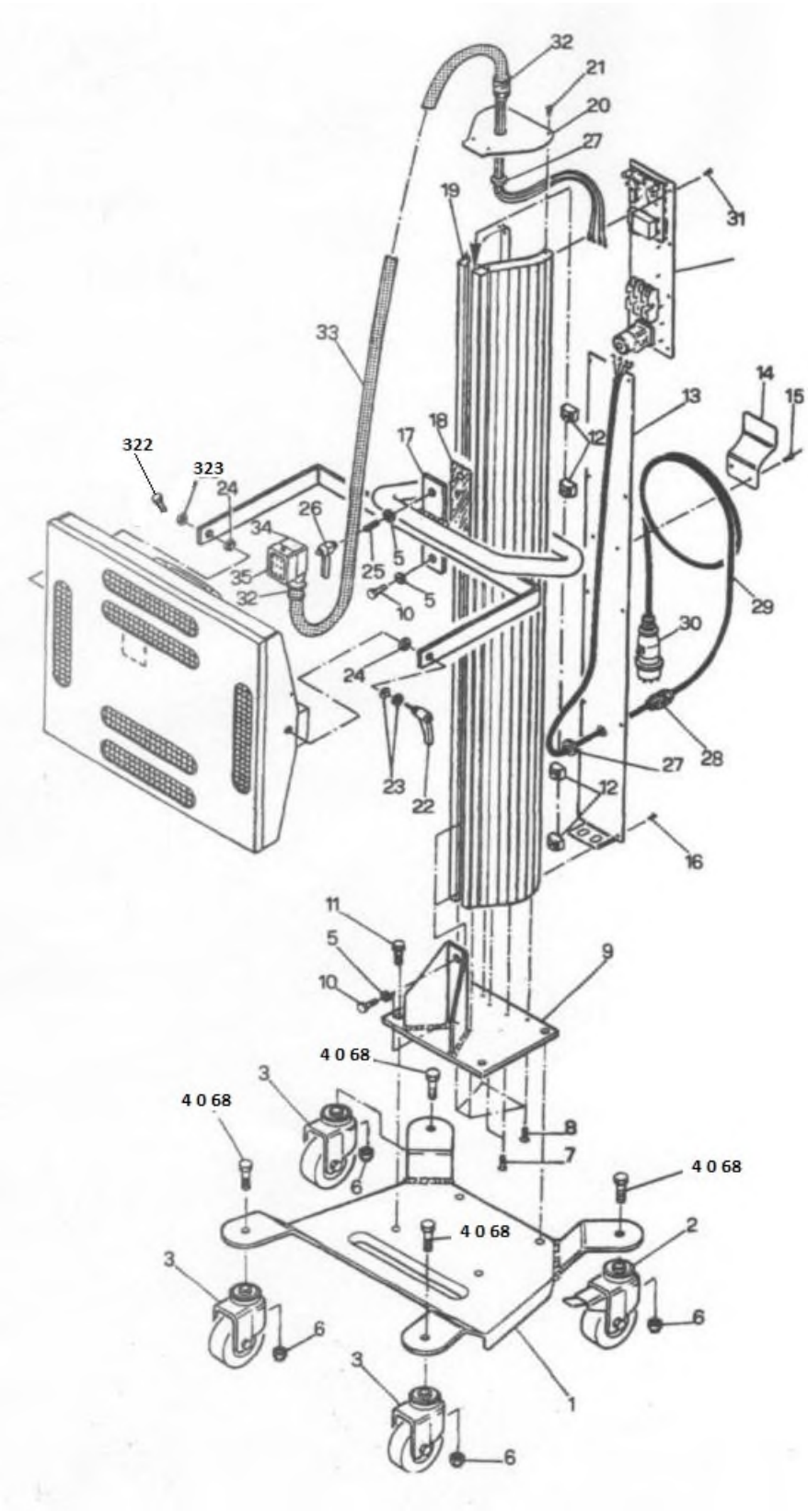

www.infrarr.com Tel. +39 02 95 36 00 93 Fax +39 02 95 36 00 97 info@infrarr.com