R.U.P.E.S. spa
Realizzazione Utensili
Pneumatici Elettrici Speciali
sede operativa: via Marconi, 3A
20080 Vermezzo (MI) - Italy
tel.: ++39.02.946941
fax.: ++39.02.94941040
e-mail: info_rupes@rupes.it

web: www.rupes.com
cod.fisc. e part. IVA: IT 05094230157
cap.sociale: euro 2.100.000 int.vers.
REA: MI-1163819
Reg. Imprese n. 0509430157
sede legale: v.le Bianca Maria, 13 - Milano
REG. RAEE: IT08020000000741
REG. PILE: IT09060P00000205

RUPES®

LUCIDATRICE ROTORBITALI
RANDOM-ORBITAL POLISHER

LHR12E

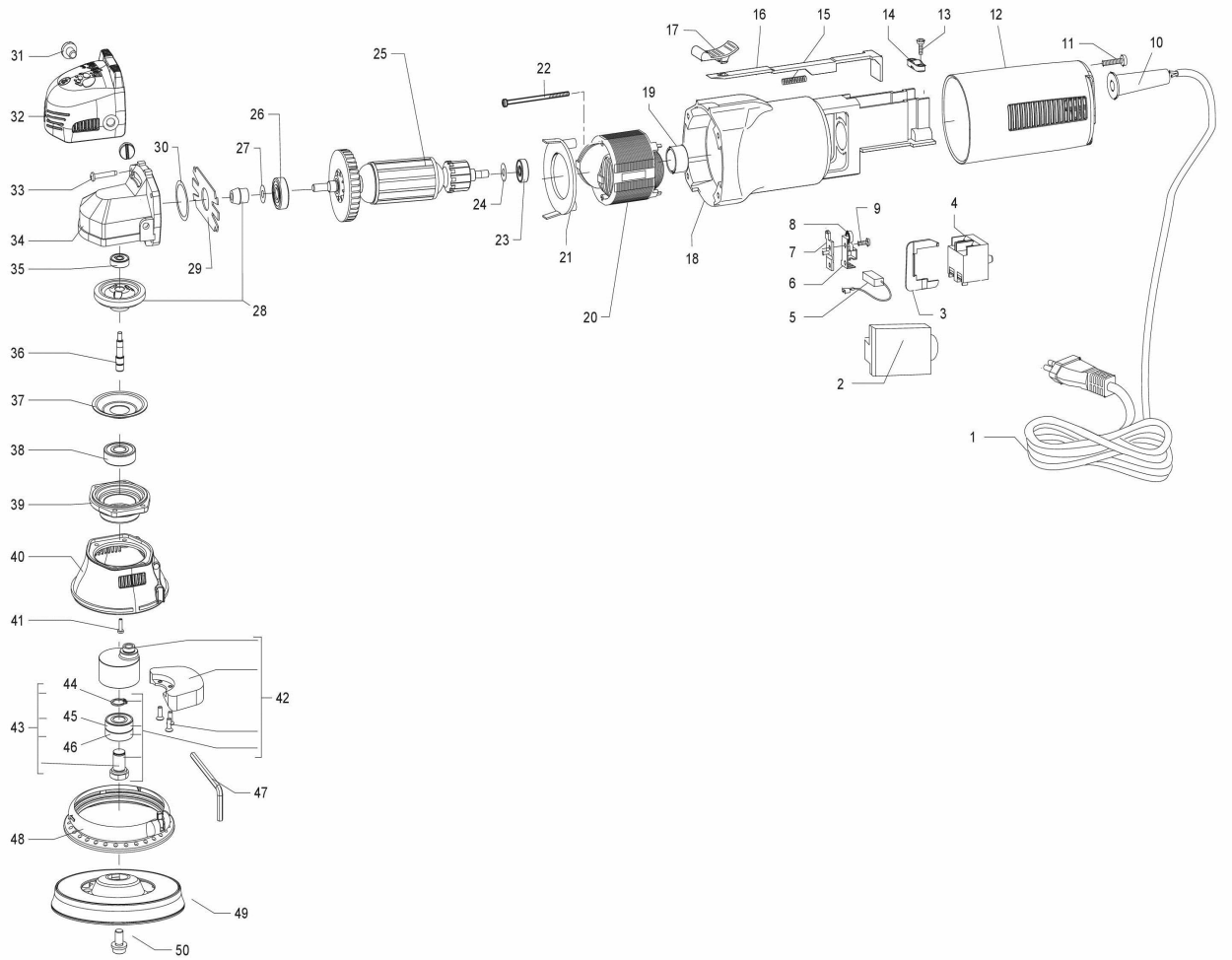

RUPES

R.U.P.E.S. spa
Realizzazione Utensili
Pneumatici Elettrici Speciali
sede operativa: via Marconi, 3A
20080 Vermezzo (MI) - Italy
tel.: ++39.02.946941
fax.: ++39.02.94941040
e-mail: info_rupes@rupes.it

web: www.rupes.com
cod.fisc. e part. IVA: IT 05094230157
cap.sociale: euro 2.100.000 int.vers.
REA: MI-1163819
Reg. Imprese n. 0509430157
sede legale: v.le Bianca Maria, 13 - Milano
REG. RAEE: IT08020000000741
REG. PILE: IT09060P00000205

ID	ITEM	DESCRIPTION
001	9C2X0,8VUS4	CABLE 2x18AWG plug USA polarized 4mt.
001	9C2X1,0N484FOR	CABLE 2X1 (plug schuko Ø 4,8) mt.4 with fork
001	9C2X1,0NGB4FOR	CABLE 2X1 (plug UK) with fork H07RN-F CENTRAL METAL PLUG
001	9C2X1,0R404FOR	CABLE 2X1 (plug D4) H07RN-F mt.4 with fork (only Swiss)
001	9C2X1,0VJA3	CABLE 2X1 (plug JAPAN) mt 3.50
001	9C2X1,0NAU4	CABLE 2X1 (plug Australia) H07RN-F mt.4
002	400.247	ELECTRONIC MODULE
002	400.247/120	ELECTRONIC MODULE
003	382.247	SWITCH SEPARATOR
004	45.210	SWITCH
005	47.105/10	BRUSH
006	46.105	BRUSH HOLDER
007	462.105	BRUSH HOLDER PLATE
008	461.105	SPRING BRUSH HOLDER BURNISHED
009	9.551	SCREW 2,9x13 (4x1/2") T.C.C.
010	42.105	CABLE SLEEVE BA21-BR51
011	9.664	SCREW 3,9x19 (7x3/4") T.C.C.
012	44.247/UL	REAR CAP UL material
012	44.247	LHR12E BACK CAP
013	9.660	SCREW 3,9x16 (7x5/8") T.C.C.
014	442.55	CABLE CLAMP
015	75.105	SPRING
016	38.247	BEAM SWITCH
017	381.247	RUBBER BUTTON ON/OFF
018	31.247/UL	MOTOR BODY(UL material)
018	31.247	MOTOR BODY
019	268.105	BEARING CAP
020	2.247/100	STATOR (V.100)
020	2.247/120	STATOR (V.120)
020	2.247/230	STATOR (V.230)
021	73.105	AIR BULKHEAD
022	9.570	SCREW 2,9x60 (4x2"3/8)T.C.C.
023	9.14/10	BEARING 626ZZ1MC3E J NS7SQ
024	9.318	STEEL WASHER d15 x 6,1 s 0,15
025	1.247/230	ROTOR (V.230)
025	1.247/120	ROTOR (V.120)
025	1.247/100	ROTOR (V.100)
026	9.187/10	BEARING 629 2BRS R66 FA227
027	9.318	STEEL WASHER d15 x 6,1 s 0,15
028	50.245	GEAR SET
029	351.105	MOTOR BODY LITTLE COVER
030	9.364	STEEL WASHER d25,9x21 s 0,1
031	812.91	SCREW M8 x 15 T.C.IN NYLON A T.
032	81.247	CAP
033	9.679	SCREW 4,2x25 (8x1") T.C.C.
034	32.247/C	COMPLETE GEAR BOX
035	9.14/10	BEARING 626ZZ1MC3E J NS7SQ
036	511.123	SPINDLE SHAFT
037	35.105	FLANGE PLATE BA21-SL41
038	9.190/10	BEARING 6201 DDW1CM D ENSS6
039	33.247	FLANGE
040	65.245	PROTECTIVE CAP
041	9.835	SCREW M4 x 20 T.C.C. 8G BURNISHED +
042	58.247N/C	ECCENTRIC ASSEMBLY
043	56.245N/C	ECCENTRIC SHAFT ASSEMBLY
044	9.102	SEEGER d 12 TIPO E DIN 471 CR3 PHOSPHATE

RUPES

R.U.P.E.S. spa
Realizzazione Utensili
Pneumatici Elettrici Speciali
sede operativa: via Marconi, 3A
20080 Vermezzo (MI) - Italy
tel.: ++39.02.946941
fax.: ++39.02.94941040
e-mail: info_rupes@rupes.it

web: www.rupes.com
cod.fisc. e part. IVA: IT 05094230157
cap.sociale: euro 2.100.000 int.vers.
REA: MI-1163819
Reg. Imprese n. 0509430157
sede legale: v.le Bianca Maria, 13 - Milano
REG. RAEE: IT08020000000741
REG. PILE: IT09060P00000205

ID	ITEM	DESCRIPTION
045	9.175/10	BEARING 6001 ZZ-C3
046	9.182/10	BEARING 6001 DDWCM J NS75Z
047	9.1395	ALLEN SPANNER 5mm
048	651.246	RUBBER SHROUD
049	980.027N/5	BOX 5pcs Ø 125mm PAD VELCRO M8 FOR LHR15ES
050	9.715	SCREW M8 x 16 T.B. ZINC-PLATED WITH WASHER